How to Replace a Lithium Battery

1

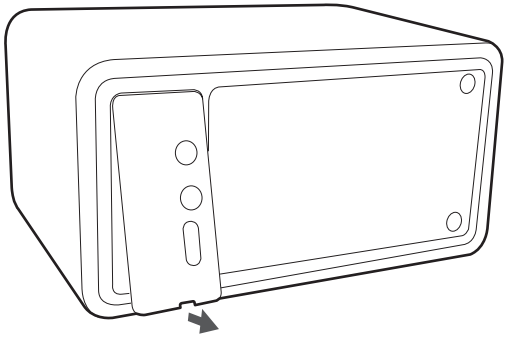

2

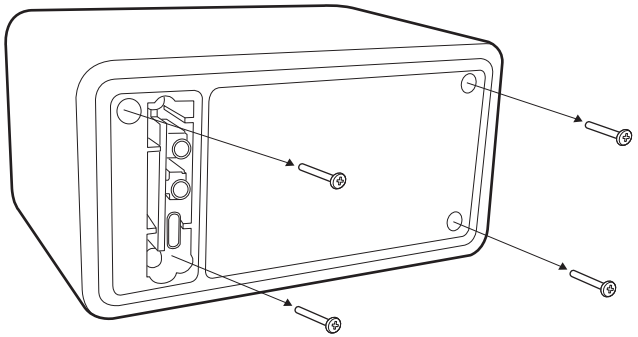

3

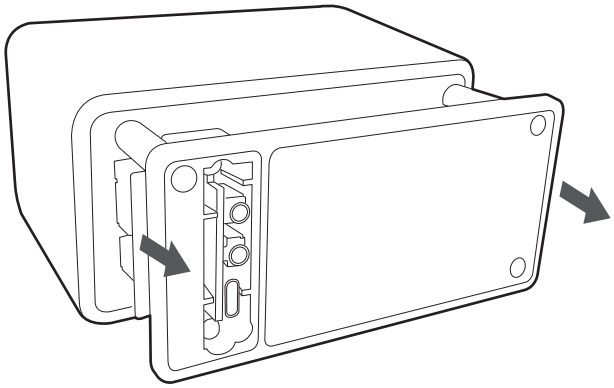

4

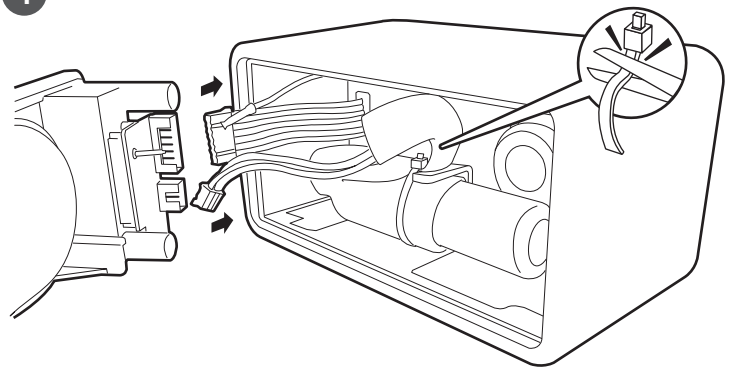

5

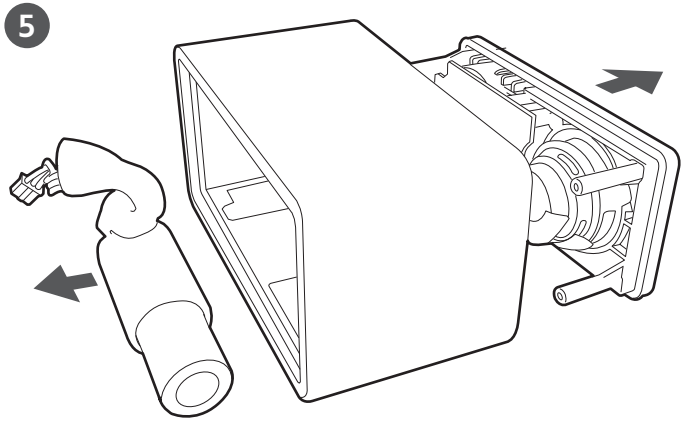

6

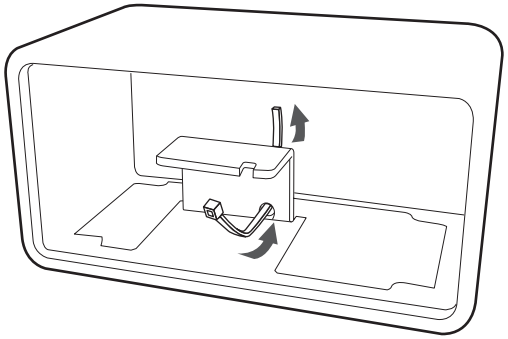

7

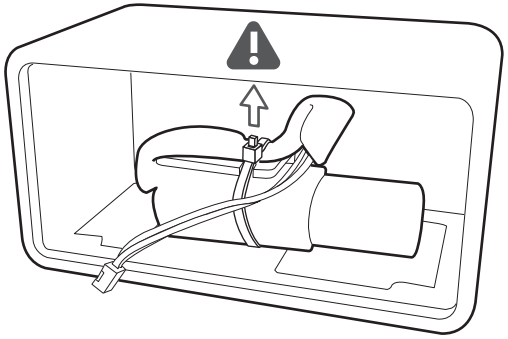

8

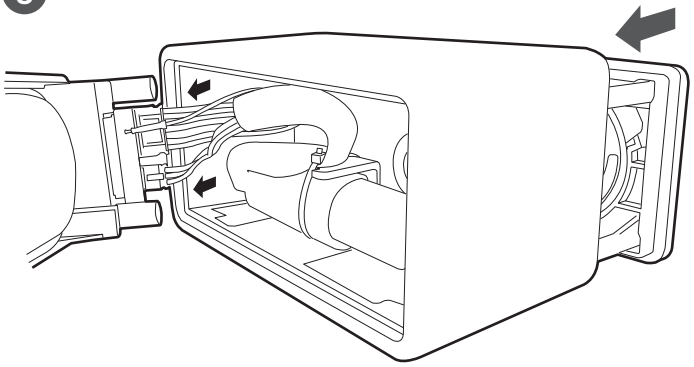

9

